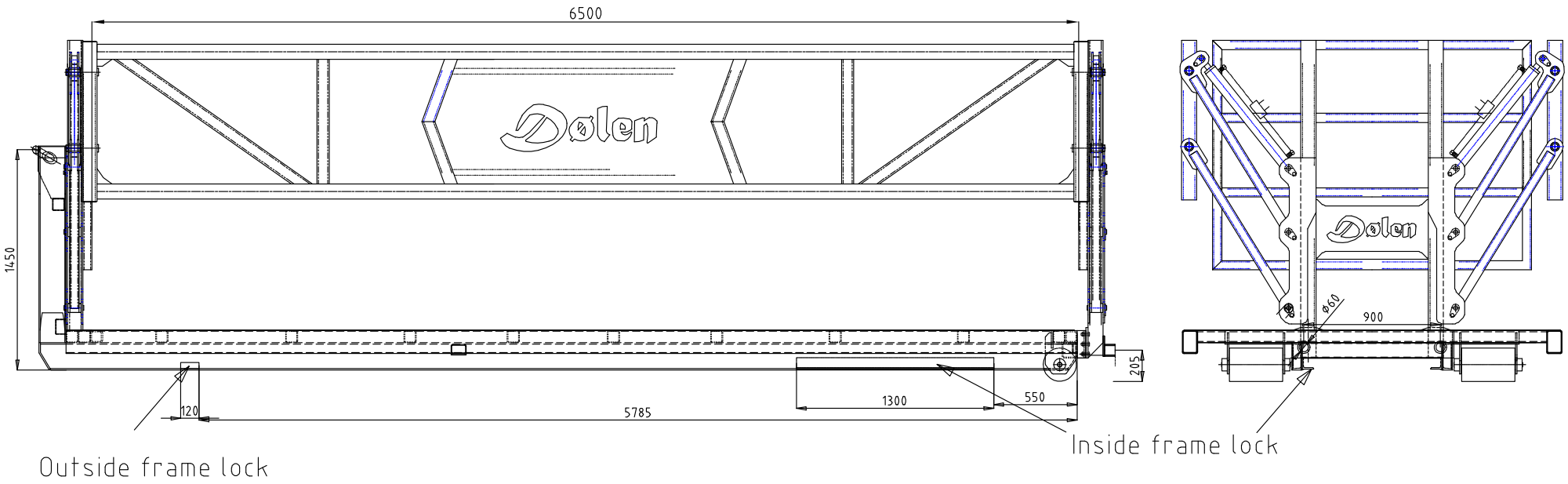
6500
1450
205
120
5785
1300
550
Outside frame lock
Inside frame lock
ø60
900